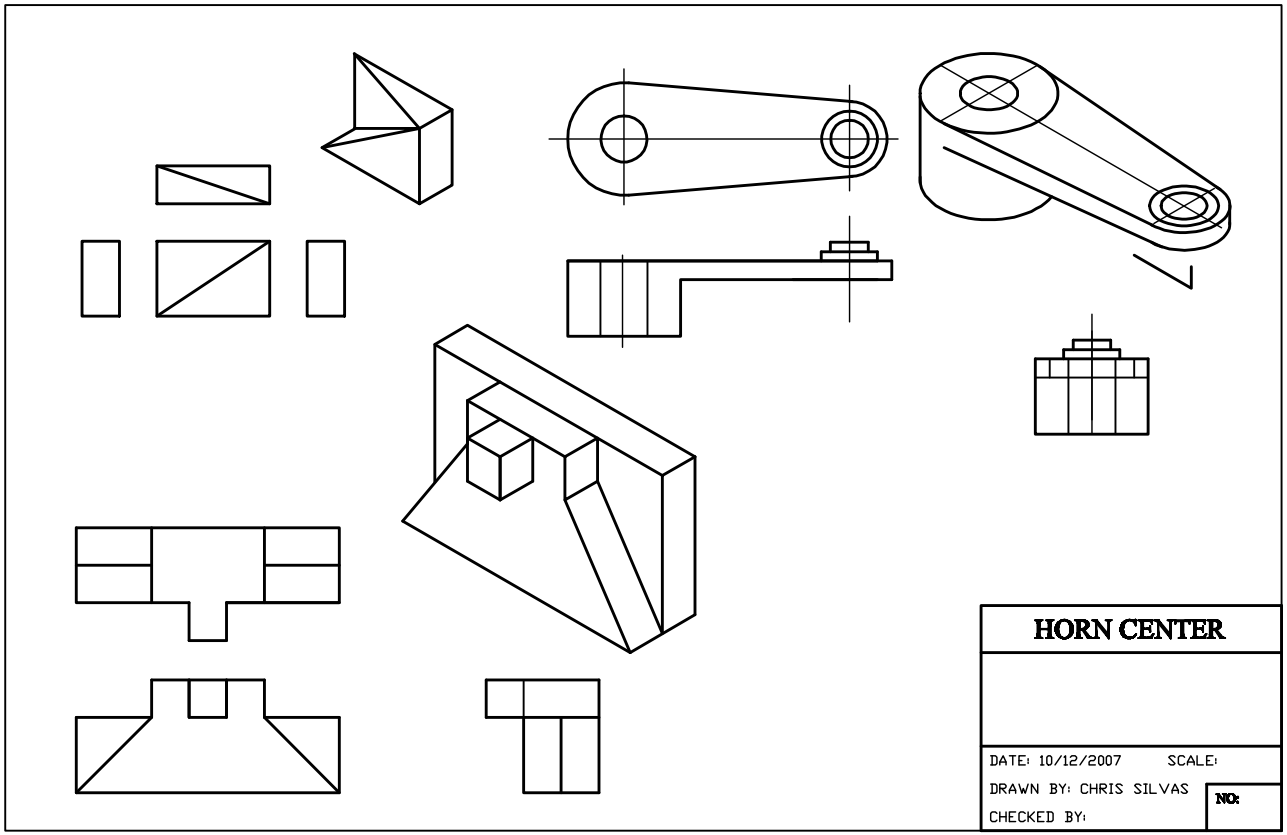
HORN CENTER
DATE: 10/12/2007
SCALE:
DRAWN BY: CHRIS SILVAS
CHECKED BY:
NO: